Well Probe V2

Mechanical float switch for dry run protection of LORENTZ solar pumps

The well probe provides a reliable method of run dry protection for LORENTZ pumps. The well probe detects that water is present within a well, tank or other water source. The well probe is typically attached to the riser pipe above the pump and connected to the controller. When the well probe becomes dry (water level is below the probe) the pump switches off to avoid dry running.

Order Information

Item no.: 19-000005 **Product name:** Well probe sensor V2

Features

- Reliable dry run protection
- Simple to install using 3 cable ties
- Improved tolerance to dirt
- Splicing kit and cable ties for fixing are included

Technical Data

- Max. operating temperature 55°C
- Enclosure class: IP68
- Submersion depth: max 50 m (164 ft)
- Cable length: 1.5 m
- Wire size: 2 x 0.50 mm² or AWG 20, waterproofed
- Must be mounted in a vertical position
- Meets the requirements for CE

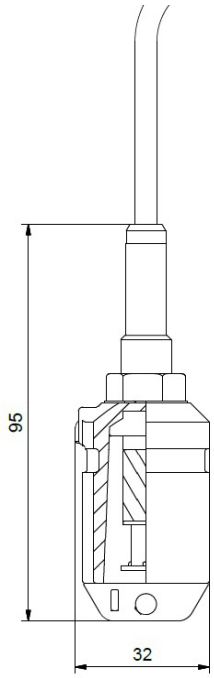

Dimensions / Weight

- Packaging dimensions: 255 x 170 x 40 mm
  10.0 x 6.7 x 1.6 in
- Total weight: 0.1 kg / 0.2 lbs

BERNT LORENTZ GmbH
Siebenstuecken 24, 24558 Henstedt-Ulzburg, Germany
Tel +49 (0)4193 8806-700, www.lorentz.de

Sun. Water. Life.

All specifications and information are given with good intent, errors are possible and products may be subject to change without notice.
Pictures may differ from actual products depending on local market requirements and regulations.

V181107

Float Switch

Mechanically Activated Device for Water Level Detection in Applications with LORENTZ Solar Pump Systems

The switch can be used to detect the water level within a tank. When the water level in the tank reaches the maximum, the LORENTZ Controller will stop the pump and indicates Tank Full LED.

ORDER INFORMATION

- **Item no.:** 19-000030 **product name:** Float Switch

FEATURES

- **N.O.** (normally open) and **N.C.** (normally closed) function
- Reliable water level detection
- Simple to install
- Trouble free operation
- Not sensitive to rotation
- Corrosion-free

TECHNICAL DATA

- Operating temperature: -10°C to 55°C
- Storage temperature: : -10°C to 55°C
- Enclosure class: IP68
- Cable length: 3m, waterproof
- Wire size: 3x 1.0mm² or AWG 18
- Meets the requirements for CE

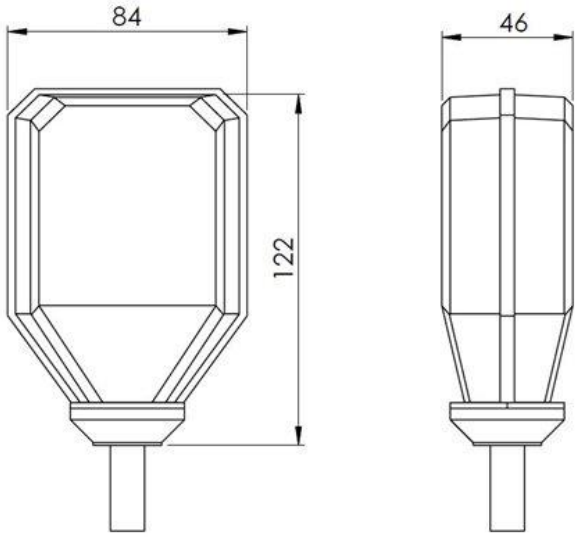

DIMENSION/WEIGHT

- Packaging dimensions: 230 x 160 x 55 mm
  9.1 x 6.3 x 2.2 in
- Total weight: 0.8 kg / 1.8 lbs

BERNT LORENTZ GmbH
Siebenstuecken 24, 24558 Henstedt-Ulzburg, Germany
Tel +49 (0)4193 8806-700, www.lorentz.de

Sun. Water. Life.

All specifications and information are given with good intent, errors are possible and products may be subject to change without notice.
Pictures may differ from actual products depending on local market requirements and regulations.

V180904

Pressure Switch

Device for Water Pressure Detection in Applications with LORENTZ Solar Pump Systems

The switch can be used to detect the water level within a tank. When the water level in the tank reaches the maximum, the pressure will increase and the LORENTZ Controller will stop the pump and indicates Tank Full LED.

ORDER INFORMATION

- **Item no.:** 19-000310 **product name:** Pressure Switch 1-5bar

FEATURES

- Reliable water pressure detection
- Simple to install
- Trouble free operation
- Corrosion-free

TECHNICAL DATA

- Pressure range between 1 and 5 bar
- 2x cable gland Ø 5-9mm
- G ¼'' pipe thread
- Meets the requirements for CE

DIMENSION/WEIGHT

- Packaging dimensions: 130 x 105 x 65 mm
  5.1 x 4.2 x 2.6 in
- Total weight: 0.5 kg / 1 lbs

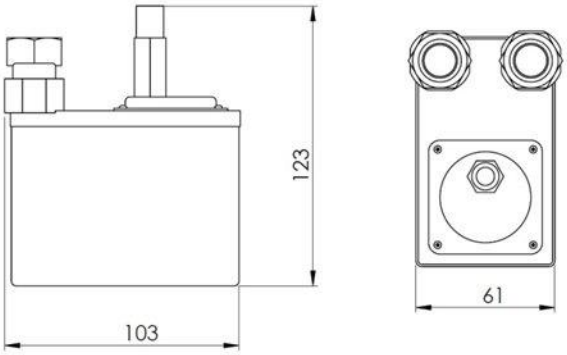

BERNT LORENTZ GmbH
Siebenstuecken 24, 24558 Henstedt-Ulzburg, Germany
Tel +49 (0)4193 8806-700, www.lorentz.de

Sun. Water. Life.

All specifications and information are given with good intent, errors are possible and products may be subject to change without notice.
Pictures may differ from actual products depending on local market requirements and regulations.

V180904

Liquid Level Sensor

Sensor for measuring the level of liquid in a well or tank

USE / PURPOSE

The range of liquid level sensors use pressure to measure the liquid level in a well or tank. The sensors can be used for collection of long term liquid level monitoring and also for pump control in applications where a well probe cannot be used. The liquid level sensor must be used with a compatible LORENTZ Controller (see requirements).

FEATURES

- Gauge pressure sensor, pressure measurement relative to atmosphere
- For measuring levels of liquid in a well or tank
- Accurate, robust sensor
- For use with LORENTZ PumpScanner and pumpMANAGER

REQUIREMENTS

- LORENTZ PS2 controller, LORENTZ PSk2 controller or PS Controller equipped with a licensed PS DataModule
- The cable contains a capillary tube to balance the sensor against atmospheric changes. The sensor must be ordered with the required cable length for the application as it cannot be spliced. Further cable lengths are available on demand, please contact LORENTZ.

TECHNICAL DATA

- Sensor type: 2 wire gauge sensor
- Enclosure class: IP68
- Sensor housing: stainless steel
- Connects to LORENTZ PS DataModule
- Oil resistant cable with capillary tube
- Overpressure: 2x full scale
- Output signal :4-20mA output
- Voltage : 12-28VDC
- Application temp.: -10 to 80°C
  14 to 176°F
- Accuracy class :0.5% FS
- Meets the requirements for CE

DIMENSION/WEIGHT

- Packing dimensions:
  19-005040: 350 x 350 x 100 mm / 13.8 x 13.8 x 3.9 in
  19-005050: 350 x 350 x 100 mm / 13.8 x 13.8 x 3.9 in
  19-005080: 350 x 350 x 100 mm / 13.8 x 13.8 x 3.9 in
  19-004395: 350 x 350 x 180 mm / 13.8 x 13.8 x 7.1 in
- Weight:
  19-005040: 4 kg / 8.8 lbs
  19-005050: 5 kg / 11.0 lbs
  19-005080: 7 kg / 15.4 lbs
  19-004395: 11 kg / 24.3 lbs

ORDER INFORMATION

Item #	Product	Pressure range	Cable length
19-005040	Liquid Level Sensor, 0-10m/33ft, 30m/100ft Cable	0-100 kPa 0 to 10 m / 0 to 33 ft 0 to 1 bar / 0 to 14.5 psi	30 m / 100 ft *
19-005050	Liquid Level Sensor, 0-20m/66ft, 40m/130ft Cable	0-200 kPa 0 to 20 m / 0 to 66 ft 0 to 2 bar / 0 to 29 psi	40 m / 130 ft *
19-005080	Liquid Level Sensor, 0-50m/164ft, 60m/200ft Cable	0-500 kPa 0 to 50 m / 0 to 164 ft 0 to 5 bar / 0 to 72.5 psi	60 m / 200 ft *
19-004395	Liquid Level Sensor, 0-100m/328ft, 140m/460ft Cable	0-1000 kPa 0 to 100 m / 0 to 328 ft 0 to 10 bar / 0 to 145 psi	140 m / 460 ft *

***Further cable length is available on demand. Please contact LORENTZ.**

BERNT LORENTZ GmbH
Siebenstuecken 24, 24558 Henstedt-Ulzburg, Germany
Tel +49 (0)4193 8806-700, www.lorentz.de

Sun. Water. Life.

V180822

All specifications and information are given with good intent, errors are possible and products may be subject to change without notice. Pictures may differ from actual products depending on local market requirements and regulations

Liquid Pressure Sensor

Sensor for measuring the pressure of liquid in a pipe or vessel

USE / PURPOSE

The sensors are commonly used to measure the pressure in the delivery pipeline or in a vessel. The pressure signal is used with a suitable LORENTZ pump controller to measure pressure and for pressure switching or constant presure applications. The liquid pressure sensor must be used with a compatible LORENTZ Controller (see requirements).

FEATURES

- Gauge pressure sensor, pressure measurement relative to atmosphere
- For measuring pressure in a pipe or vessel
- Accurate, robust sensor
- For use with LORENTZ PumpScanner and pumpMANAGER

REQUIREMENTS

- LORENTZ PS2 controller, LORENTZ PSk2 controller or PS Controller equipped with a licensed PS DataModule
- Care must be taken to position the sensor without turbulent water to ensure accurate measurement
- G1/4” or G1/2” female threaded filling / air vent hole is required to mount the sensor

TECHNICAL DATA

- Sensor type: 2 wire gauge sensor
- Enclosure class: IP65
- Sensor housing : stainless steel
- Connects to LORENTZ PS DataModule
- 5m/10m (16ft/33ft) cable length
- Overpressure: 1.5x full scale
- Output signal : 4-20 mA
- Voltage : 11-28 VDC
- Application temp.: -30 to 80°C
  -22 to 176°F
- Accuracy class : 0.5% full scale
- Thread type: G1/2” male (G1/4” with adapter)
- Meets the requirements for CS

ORDER INFORMATION

Item #	Product	Pressure range
19-004450	Liquid Pressure Sensor, LPS-500	0-500 kPa 0 to 5 bar / 0 to 72.5 psi
19-004460	Liquid Pressure Sensor, LPS-1000	0-1000 kPa 0 to 10 bar / 0 to 145 psi
19-002760	Liquid Pressure Sensor, LPS-2000	0-2000 kPa 0 to 20 bar / 0 to 290 psi

DIMENSION/WEIGHT

- Packing dimensions: 190 x 180 x 80 mm
  7.5 x 7.1 x 3.2 in
- Weight: 0.6 kg / 1.3 lbs

BERNT LORENTZ GmbH
Siebenstuecken 24, 24558 Henstedt-Ulzburg, Germany
Tel +49 (0)4193 8806-700, www.lorentz.de

Sun. Water. Life.

V181608

All specifications and information are given with good intent, errors are possible and products may be subject to change without notice. Pictures may differ from actual products depending on local market requirements and regulations

Water Meter

Device to measure the water flow rate

ORDER INFORMATION

- **Item no.:** 19-002160 **product name:** Water Meter, WP-DN40, 0.1cbm/p
- **Item no.**: 19-002165 **product name:** Water Meter, WP-DN50, 0.1cbm/p
- **Item no.:** 19-002170 **product name:** Water Meter, WP-DN65, 0.1cbm/p
- **Item no.:** 19-002180 **product name:** Water Meter, WP-DN80, 0.1cbm/p
- **Item no.:** 19-002190 **product name:** Water Meter, WP-DN100, 0.1cbm/p
- **Item no.:** 19-002200 **product name:** Water Meter, WP-DN125, 0.1cbm/p
- **Item no.:** 19-002210 **product name:** Water Meter, WP-DN150, 1cbm/p
- **Item no.:** 19-002202 **product name:** Water Meter, WP-DN200, 1cbm/p

FEATURES

- Dry dial register ensures clear reading
- Low pressure loss, long working life
- Easy to install
- **Only for use in combination with DataModule:**
  - The water meter is equipped with a reed switch assembly which can be connected to the DataModule

TECHNICAL DATA

- Water temperature: max. 40°C
- Water pressure: max. 16 bar
- IP64
- Meets the requirements for CE

Nominal Diameter	DN	40	50	65	80	100	125	150	200
Max. flow rate [m³/h]	Q_{max}	20	30	50	80	120	200	300	500
Nominal flow rate [m³/h]	Q_n	10	15	25	40	60	100	150	250
Transition flow rate [m³/h]	Q_t	3.0	3.0	5.0	8.0	12	20	30	50
Minimum flow rate [m³/h]	Q_{min}	0.7	0.7	0.75	1.2	1.8	3.0	4.5	7.5

BERNT LORENTZ GmbH
Siebenstuecken 24, 24558 Henstedt-Ulzburg, Germany
Tel +49 (0)4193 8806-700, www.lorentz.de

Sun. Water. Life.

All specifications and information are given with good intent, errors are possible and products may be subject to change without notice.
Pictures may differ from actual products depending on local market requirements and regulations.

V180903

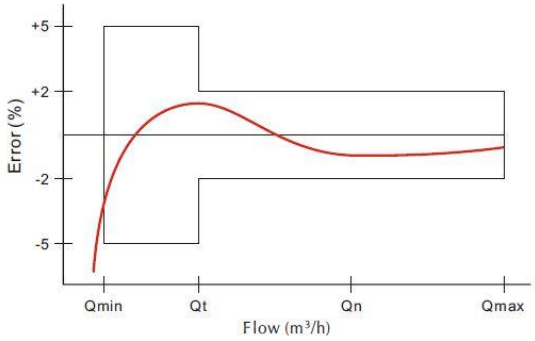

DIMENSION/WEIGHT

Nominal Diameter	DN	40	50	65	80	100	125	150	200
Length [mm]	L	260	200	200	225	250	250	300	350
Height [mm]	H	225	232	242	252	262	275	325	355
Working height [mm]	H1	303	303	313	323	333	346	396	426
Height [mm]	G	360	360	360	360	360	360	420	420
Outside diameter [mm]	D	150	165	185	200	220	250	285	340
Circle diameter [mm]	D1	110	125	145	160	180	210	240	295
Connecting bolt quantity		4xM16	4xM16	4xM16	8xM16	8xM16	8xM16	8xM20	12xM20
Weight [kg]		12	12	13	16	18	20	42	74

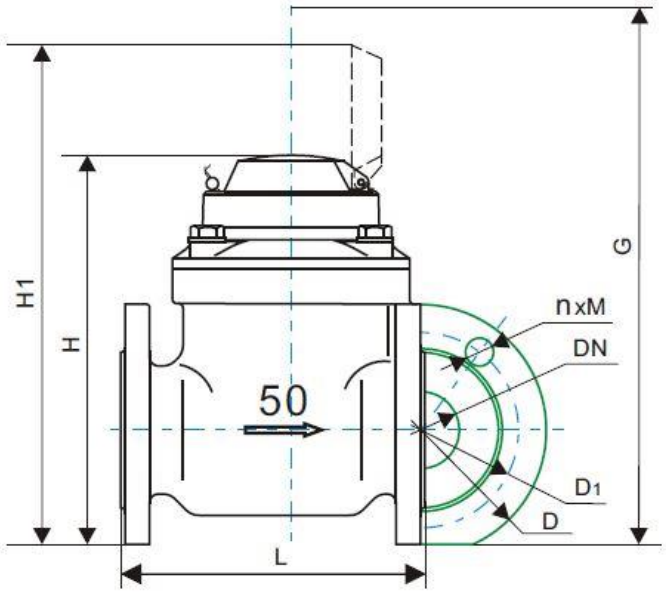

BERNT LORENTZ GmbH
Siebenstuecken 24, 24558 Henstedt-Ulzburg, Germany
Tel +49 (0)4193 8806-700, www.lorentz.de

Sun. Water. Life.

V180903

All specifications and information are given with good intent, errors are possible and products may be subject to change without notice.
Pictures may differ from actual products depending on local market requirements and regulations.

SmartStart

Automatic Remote Diesel Generator Switching Device

The SmartStart can automatically and remotely start and stop diesel generators for hybrid solar pumping. It has a secondary ancillary output for switching other devices. It connects to the PSk2 Controller and to the remote switch input of the diesel generator.

ORDER INFORMATION

- Item no.: 19-004280 Product name: SmartStart

FEATURES

- Automatically switches on/off diesel engines equipped with remote start input (NO)
- SmartStart provides power to the PSk2 systems for night time logic operation such as early morning pump starting
- Battery charging from PSk2 Controller
- Shows system status via LEDs
- Ancillary output for switching other devices

TECHNICAL DATA

- Max. contact rating: 277 V AC / 30 V DC / 3 A
- Enclosure class: IP54
- Nominal cross section for GEN Link cable 1.5 mm²
- Further information is available in the PSk2 manual on partnerNET

PRODUCT CONTENT

The SmartStart comes with a cable to connect to the PSk2 Controller. (1.50 m) The required battery must be ordered separately. The battery must meet the following requirements:

- Sealed 12 V AGM lead acid battery Min capacity: 7 Ah

DIMENSION/WEIGHT

- Packaging dimensions: L x W x H 270 x 250 x 230 mm (10.6 x 9.8 x 9.1 in)
- Total weight (without battery): 2.8 kg (6.2 lbs)
- Battery case: L x W x H 151 x 70 x 95 mm (5.94 x 2.56 x 3.74 in)

BERNT LORENTZ GmbH
Siebenstuecken 24, 24558 Henstedt-Ulzburg, Germany
Tel +49 (0)4193 8806-700, www.lorentz.de

Sun. Water. Life.

V181030

All specifications and information are given with good intent, errors are possible and products may be subject to change without notice.
Pictures may differ from actual products depending on local market requirements and regulations.

PV Disconnect 1000-300-30

30 string connection box with DC disconnect switch and surge protection

photo may differ from actual product

ORDER INFORMATION

- Item no.: 19-000113
- Product name: PV Disconnect 1000-300-30

FEATURES

- Simple and cost-effective unit to connect up to 30 module strings in parallel
- Includes an appropriate DC rated disconnect switch and string fuses (15 A)
- Includes surge protection
- Designed for PSk2-100 pump systems

TECHNICAL DATA

- Wiring of up to 30 PV strings in parallel
- DC rated disconnect switch enclosed
- Enclosure class IP 54
- Meets the requirements for CE

Max. voltage	1,000 V DC (U_{oc}) 880 V DC (U_{mp})
Max. current per string	15 A
Max. total current	300 A
Max. no. of strings	30
String cable size	4 - 10 mm²
Output cable size	4 - 16 mm²

DIMENSION/WEIGHT [mm]

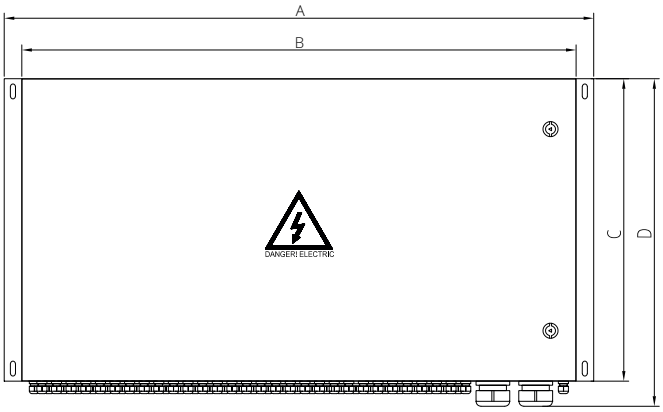

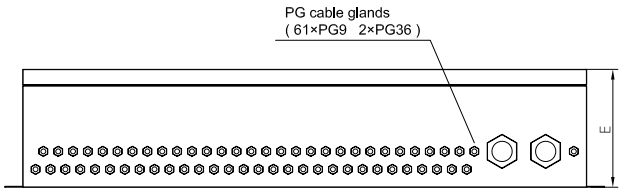

Dimension in mm [in]					
A	**B**	**C**	**D**	**E**	**Weight in kg [lbs]**
1170	1100	600	650	230	68
[46.06]	[43.31]	[23.62]	[25.60]	[9.06]	[149.91]

Packing dimensions:
1240 mm x 800 mm x 410 mm (48.82 in x 31.50 in x 16.14 in)

Weight
90 kg (198.42 lbs)

BERNT LORENTZ GmbH
Siebenstuecken 24, 24558 Henstedt-Ulzburg, Germany
Tel. +49 (0) 4193 8806 - 700, www.lorentz.de

Sun. Water. Life.

All specifications and information are given with good intent, errors are possible and products may be subject to change without notice.
Pictures may differ from actual products depending on local market requirements and regulations.

V181022

Surge Protector2

Device to Protect LORENTZ Pump Accessories from Voltage Spikes

ORDER INFORMATION

- **Item no.:** 19-005210 **product name:** Surge Protector2

FEATURES/COMPATIBILITY

- Reliable surge protection device for any switched, pulse or analogue (4-20 mA) inputs sensors including:
  - Well Probe Sensor 19-000000
  - Water Sensor 19-000001
  - Float Switch 19-000030
  - Pressure Switch 19-000310
  - Liquid Level (all types, e.g. 19-005040)
  - Liquid Pressure Sensor (all types, e.g. 19-004460)
  - Water Meter (all types, e.g. 19-002160)
  - Sun Switch (19-000050)
- The device must be installed inside the PS2 or PSk2 controller.

TECHNICAL DATA

- Max. voltage: 30 V DC
- Max current 8/20µs: 500 A
- Enclosure class: IP20
- Ambient temperature: max. 80°C (176°F)
- Wire size: 2 x 1.5mm² (AWG 16)
- Meets the requirements for CE

DIMENSION/WEIGHT

- Packing dimensions: 56 x 26 x 120 mm
  2.2 x 1.02 x 0.47 in
- Total weight 0.1 kg / 0.2 lbs

BERNT LORENTZ GmbH
Siebenstuecken 24, 24558 Henstedt-Ulzburg, Germany
Tel +49 (0)4193 8806-700, www.lorentz.de

Sun. Water. Life.

All specifications and information are given with good intent, errors are possible and products may be subject to change without notice.
Pictures may differ from actual products depending on local market requirements and regulations.

V191120

SmartPSUk2-100

AC/DC Converter to Supply PSk2 Pump Systems with Power from a Generator or Grid Supply

Description

The SmartPSUk2-100 automatically blends power from solar and external sources, only using the external source where the demand for water requires it. This is not a switching system that switches between sources but effectively blends power so that only the power that is needed is demanded from the non-solar source. For a hybrid generator solution, this means running at partial load, for a hybrid grid solution this means using kWh from the grid as a top up.

Features

- Provides DC power to PSk2 pump controllers from AC and DC sources
- Blends solar power (DC) with AC power from the grid or generator
- Part of the PSk2 SmartSolution for hybrid powering of water pumping systems
- Data link to PSk2 controller for control and monitoring
- Integrated overheat protection and active cooling

photo may differ from actual

Ordering and shipping information

- Packing dimension: 580 x 740 x 990 mm (22.8 x 29.1 x 40.0 in)
- Packed weight: 65 kg (144 lbs)
- See next page for item numbers and variants

Approvals and standards

The AC/DC converter has the following standards:

- Meets the requirements for CE

SmartSolution OVERVIEW

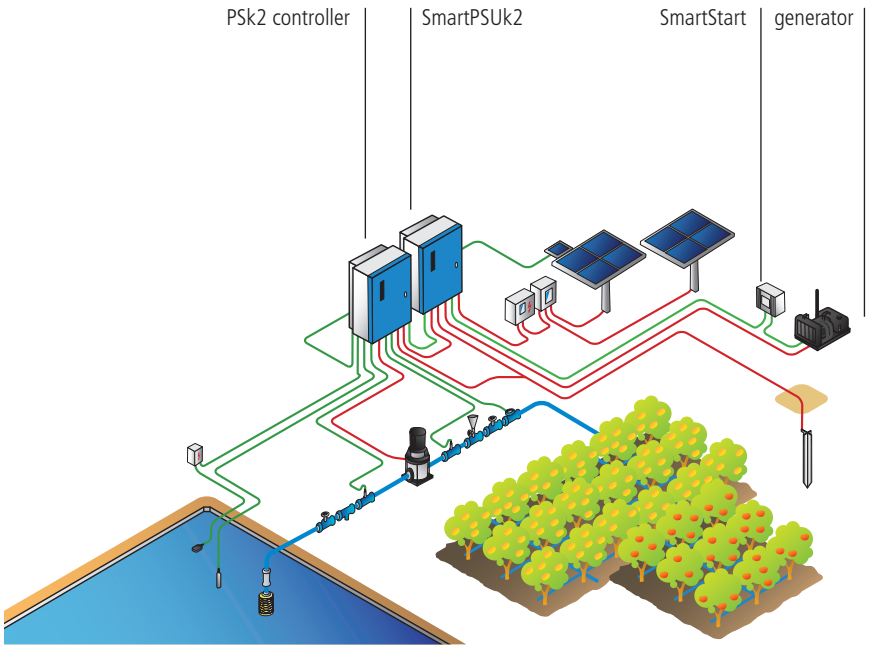

BERNT LORENTZ GmbH
Siebenstuecken 24, 24558 Henstedt-Ulzburg, Germany
Tel. +49 (0) 4193 8806 - 700, www.lorentz.de

Sun. Water. Life.

All specifications and information are given with good intent, errors are possible and products may be subject to change without notice.
Pictures may differ from actual products depending on local market requirements and regulations.

V201110

Order information

Item number	Description
19-002570	SmartPSUk2-100

Mounting options

- The SmartPSUk2-100 comes with a cable to connect to the PSk2 Controller (3.50 m) and a back plate for mounting on non-flat surfaces.

Technical data / Specifications

3-Phase AC input	380/400/415 VAC 50 Hz/60 Hz max. 95 kW
DC output	Umax = 850 V DC Imax = 170 A
PV max open circuit voltage:	850 V DC
Environmental protection	IP54
Housing material	Stainless steel powered coated case
Ambient temperature	-10 to 50°C

Dimensions and weight

- Weight 65 kg (143.3 lbs)
- **W1** 610mm (24”) **W2** 576mm (22.6”) **H** 859mm (33.8”) **H1** 800mm (31.5”) **H2** 350mm (13.8”) **D1** 402mm (15.8”) **d** 10mm (0.4”)

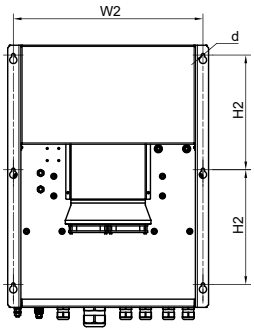

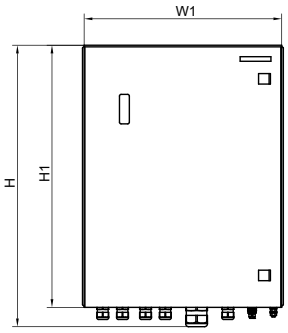

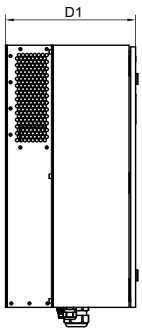

BERNT LORENTZ GmbH
Siebenstuecken 24, 24558 Henstedt-Ulzburg, Germany
Tel. +49 (0) 4193 8806 - 700, www.lorentz.de

Sun. Water. Life.

All specifications and information are given with good intent, errors are possible and products may be subject to change without notice.
Pictures may differ from actual products depending on local market requirements and regulations.

V201110